FT-01 Finger Touch Unit

For use with Hitachi CP-TW2503 and CP-TW3003 projectors

HITACHI
Inspire the Next

Peripheral Plus Series

Touch-based interactivity for greater communication versatility.



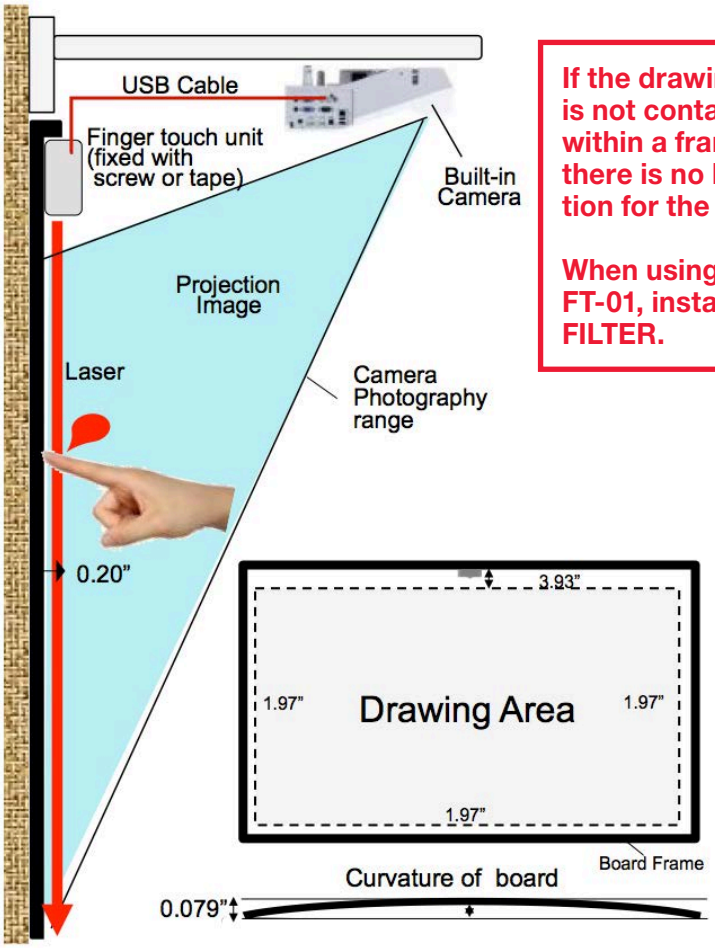

If the drawing area is not contained within a frame, there is no limitation for the FT-01.

When using the FT-01, install IR FILTER.

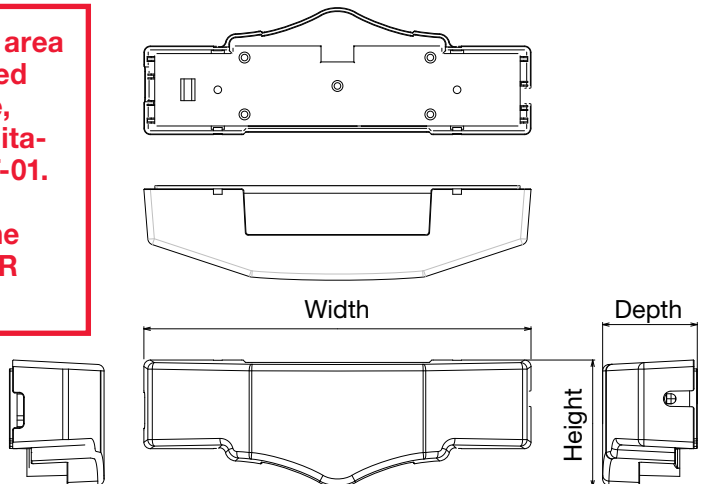

Specifications	FT-01
Power supply/Rated current	DC 5V/200mA
Power consumption	1W
Temperature range	0 ~ 40°C (Operating)
Size	7.01" (W) x 2.28" (H) x 1.73" (D) Not including protruding parts
Weight	3.88 oz.

Touchboards
205 Westwood Ave, Long Branch, NJ 07740
Phone: 866-94 BOARDS (26273) / (732)-222-1511
Fax: (732)-222-7088 | E-mail: sales@touchboards.com

HI0329-09/14

All specifications subject to change without notice.
©2014 Hitachi America, Ltd. All Rights Reserved.

Hitachi America, Ltd.
Toll Free: 1.800.HITACHI • Email: dmd.info@hal.hitachi.com
Web: hitachi-america.us/projectors • Blog: dmd.hitachi-america.us/blog